WidelOT

Product Specifications



WD140

Industrial IoT Terminal

Digital Input Acquisition | Analog Input Acquisition | LoRa Networking | Cloud Data Transmission

Product Overview



The WD140 Series Industrial IoT Terminal is an industrial-grade intelligent terminal designed for Modbus I/O data acquisition and LoRa communication. It supports optional LoRa wireless transmission, I/O data acquisition, Modbus RTU, and wireless RS485 transparent transmission.

The terminal features 2 analog inputs, 1 digital input, and 1 digital output (2AI, 1DI, 1DO). It supports data acquisition from devices using the Modbus RTU protocol via wired RS232/RS485 serial interfaces or wireless LoRa communication with adjustable transmission power. It also supports wireless LoRa-to-serial transparent transmission.

Designed for industrial applications, the WD140 Series offers high stability, reliability, and flexible scalability. It is well suited for data acquisition in harsh industrial environments and wireless communication over distances of up to 12 km (line-of-sight).

The WD140 Series is widely used in industries such as mining, oil fields, water conservancy monitoring, smart agriculture, intelligent transportation, smart factories, industrial control, building automation, healthcare, and hospitality.

Product features

- ✓ **Rich I/O Acquisition Interfaces:** Supports 2-channel 12-bit high-precision analog inputs (selectable current/voltage), 1-channel 0–60V digital input (dry/wet contact, with counter function), and 1-channel optically isolated transistor output.
- ✓ **Wireless LoRa Transmission:** Integrates a high-power LoRa wireless module with a 30 dBm transmit power and a maximum transmission distance of up to 12 km (line-of-sight). Supports 410–493 MHz or 850–930 MHz frequency bands, with configurable parameters including channel, transmit power, and data rate.
- ✓ **Standard Modbus RTU Protocol:** Complies with the standard Modbus RTU protocol, enabling efficient local I/O control and data acquisition.

- ✓ **Wireless Transparent Transmission:** Provides wireless transparent transmission for RS232/RS485 interfaces, supporting point-to-point and point-to-multipoint communication. It features interference-free coexistence and optimized data buffering capabilities.
- ✓ **Industrial-Grade Design:** Features a wide voltage input range of 5–35V and a wide operating temperature range of -40 to +85°C. Interfaces are equipped with isolation and 15kV ESD protection, while software and hardware watchdogs enable automatic recovery from abnormal conditions.

Application scenarios


Smart Factory


Intelligent Equipment


Energy Management


Smart City


Water Conservancy & Water Supply


Environmental Monitoring


Smart Agriculture


Mining & Oilfield


Building Monitoring


Medical Industry


Hotel & Commercial Business


Intelligent Transportation

Typical topology

- Local devices communicate through a LoRa local network, while the gateway enables communication and data exchange with the cloud platform.

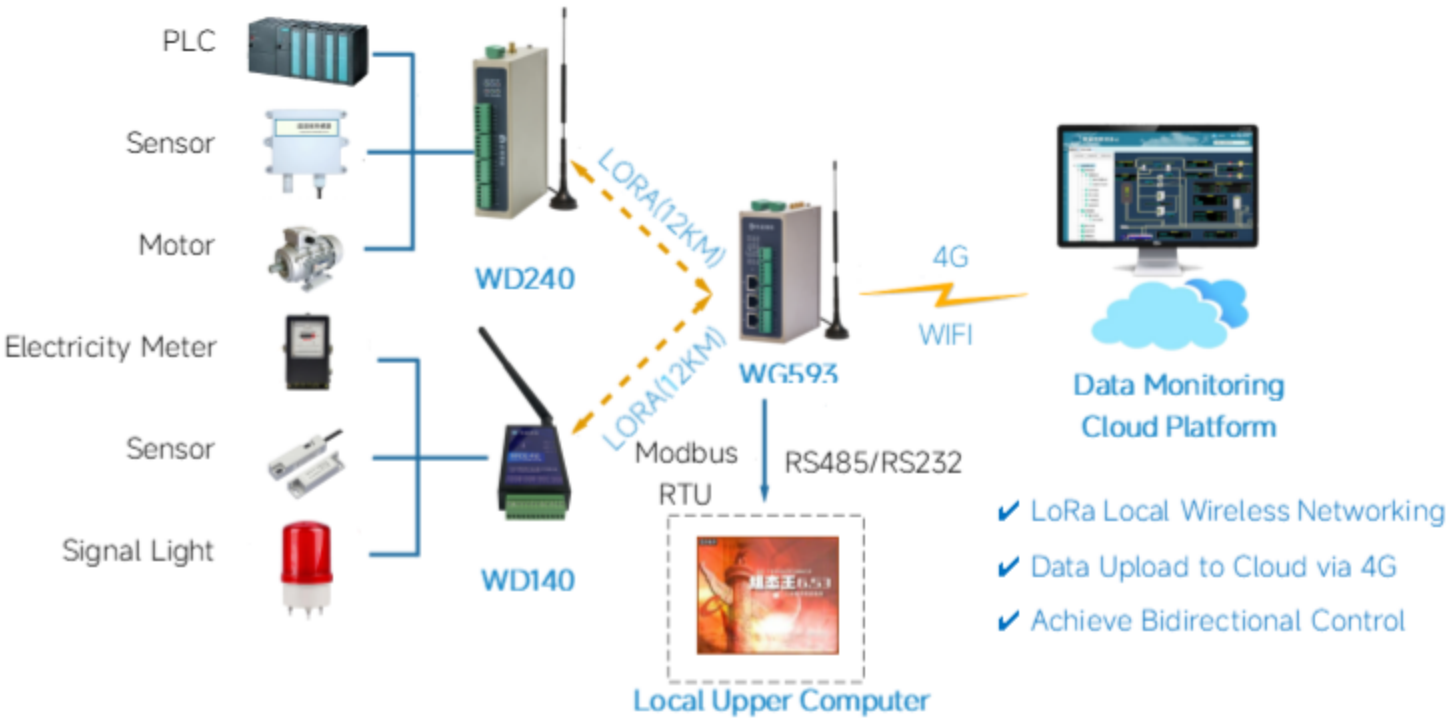

- The host computer communicates with the WD140 (slave device) over a LoRa wireless connection to read and control its I/O and serial port data.

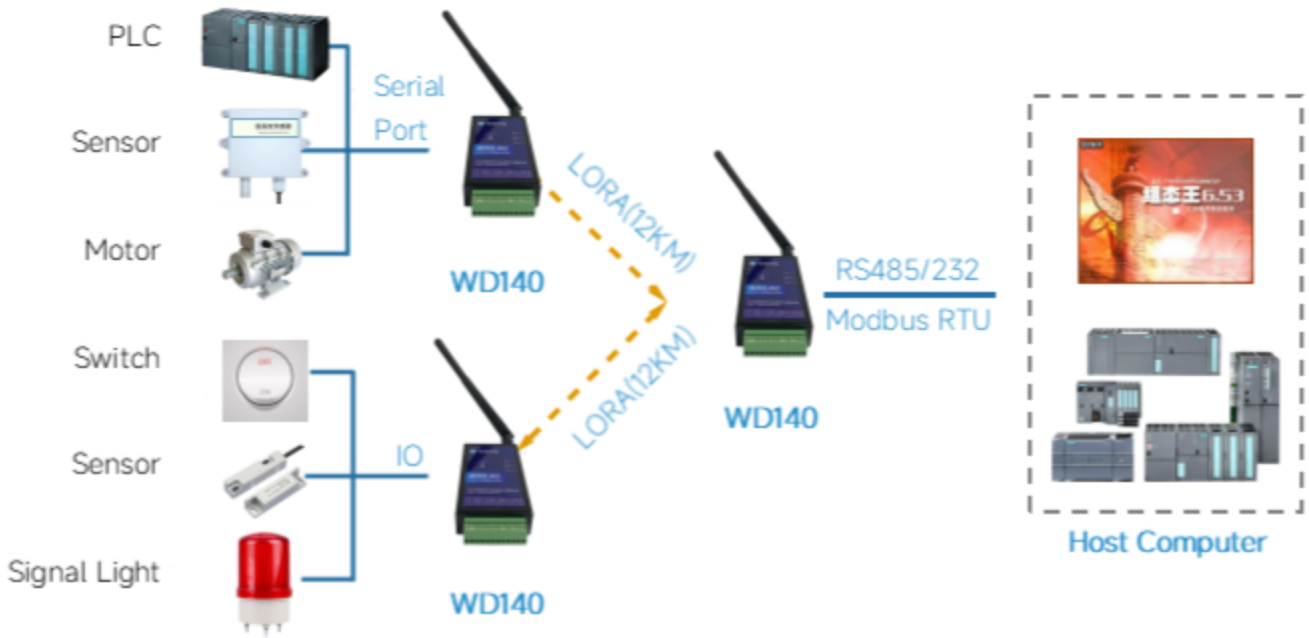

Product specifications

Hardware Parameters	
Hardware platform	
CPU Core	32-bit Arm Cortex-M4
Interface specifications	
Power socket	DC 9V-35V (terminal block)
Serial port	1*RS232/RS485 Serial Port, with 15 kV ESD protection, supports baud rates from 1200 to 128000 bit/s, with a default baud rate of 19200 bit/s
Analog Input	2 *12-bit Analog Inputs (AI) with selectable current or voltage input types.Current Input: 4–20 mA, 0–20 mA Voltage Input: 0–5 V, 0–10 V, etc.
Digital Input	1*Optically Isolated 0–60 V Digital Input (DI), supports counter functionality, with dry contact as the default input type
Digital Output	1*Optically Isolated Digital Output (DO),for loads of less than 1 A
Antenna connector	LORA Antenna :SMA x 1
Terminal Block	12*3.5mm
LoRa	
Frequency Band	410–493 MHz or 850–930 MHz (Optional)
Receiver Sensitivity	150dBm
Transmit Power	22 dBm (Maximum 30 dBm)
Communication Range	Up to 12 km (recommended: 1–2 km indoors, 4–6 km outdoors)
Air Data Rate	0.48Kbps~62.5Kbps(Up to 300 kbps)
Transmit Current	650mA
LoRa Channel	Configurable
Mechanical properties	
Dimensions	93x54x22mm
Installation method	Panel Mount
Equipment housing	Black Enclosure
Protection rating	IP30
Heat dissipation	Fanless heat dissipation
Weight	260g
Power Consumption	

Standby Power Consumption	200mA-240mA@12V
Operating Power Consumption	250mA-290mA@12V
Peak Power Consumption	300mA@12.0V
Equipment operating environment	
Ambient humidity	5% ~ 95% (Non-condensing)
Storage temperature	-40 ℃~ 85℃
Operating temperature	-40 ℃~ 85℃
Indicator light	
PWR	Power Indicator LED
COM	Serial Port Status Indicator LED
LORA	LoRa Indicator LED
LIVE	Operating Status Indicator LED
EMC Standards	
Electrostatic discharge immunity	GB/T17626.2-2018,level4
Electrical Fast Transient Pulse Immunity	GB/T17626.4-2018,level4
Oscillating magnetic field Immunity to interference	GB/T17626.18-2016,level4
Radio-frequency electromagnetic fields Radiated immunity	GB/T17626.3-2016,level4
Surge (transient) Immunity	GB/T17626.5-2019,level4
Power-frequency magnetic field Immunity	GB/T17626.8-2006,level4
Physical properties	
Vibration	GB/T2423.10-2008
Impact	GB/T2423.5-2019
Fall	GB/T2423.8-1995

Product dimensions

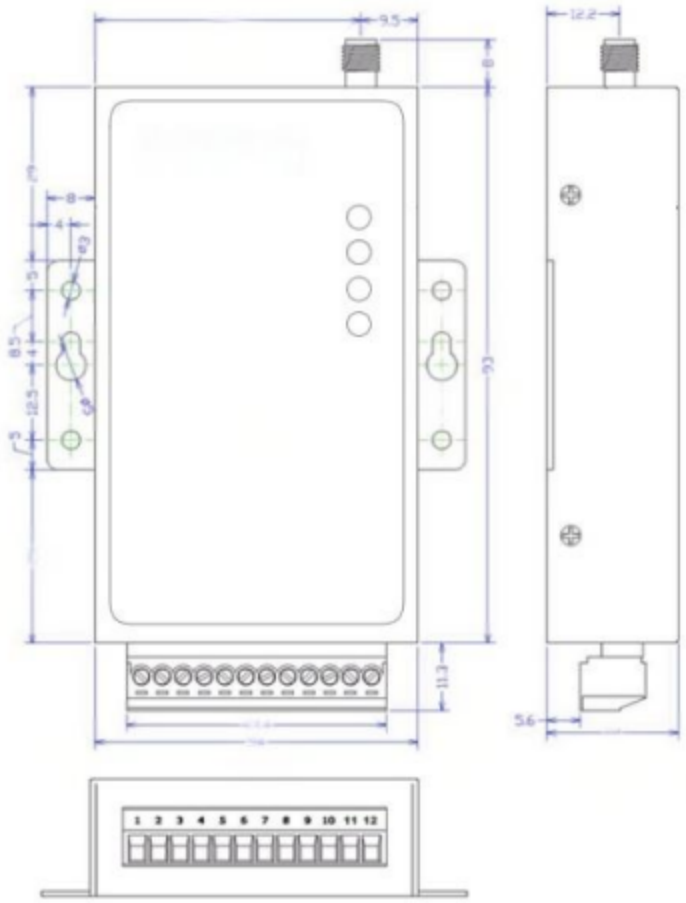

Modbus Address Mapping

Modbus Address Mapping Table		
Category	Item	Address
Analog Input Sample Value	AI0~AI1	40000,40001(Unsigned Integer) 30000,30001(Unsigned Integer)
Analog Input Actual Value	AI0~AI1	40050,40052(Floating-Point) 30050,30052(Floating-Point)
Digital Input	DI0	10000(Discrete I/O)
Digital Output	DO0	00000(Discrete I/O)

Order details

Hardware Selection	
Order number	WD140-<N>-<I>-<S>
N(Uplink Network)	R4: China LoRa R9: Global LoRa
I(I/O Module)	M0211(M indicates the module configuration, where 0 indicates no AO, 2 indicates 2 AI channels, 1 indicates 1 DI channel, and 1 indicates 1 DO channel)
Example	WD140-R4-M0211 (China LoRa band, 2AI-1DI-1DO) WD140-R9-M0211 (Global LoRa band, 2AI-1DI-1DO) .....

*This table is for reference only. The exact model selection shall be determined by the engineering team

For further information, please visit the WidelOT website: https://www.wideiot.com.

Alternatively, please contact us via the following methods:

Email: info@wideiot.com

© Xiamen WidelOT Technology Co., Ltd. All rights reserved.

No organisation or individual may, without the written permission of the Company, extract or reproduce any part or all of the contents of this document, nor may they disseminate it in any form.

The information contained in this document is subject to change without notice due to product version updates or other reasons.

About WidelOT

Founded in 2011 and headquartered in Xiamen, China, WidelOT is a specialist provider of industrial IoT products and digital solutions, focusing on sectors such as smart factories, smart equipment, energy management, hydrology and water resources, smart water management, and smart cities; The company offers a comprehensive range of products, including industrial wireless routers, industrial switches, industrial smart gateways, industrial data terminals, smart I/O modules, industrial converters, AI edge computers and IoT data cloud platforms. It is a high-tech enterprise integrating R&D, production, sales and service.

